#EDITION 2023-1

TURNKEY® RHINO

Bucket Equipment for Mining and Quarries

www.turnkeyteeth.com

30 YEARS OF EXPERIENCE

A subsidiary of the international Safe group, FEURST was created in 1992. FEURST manufactures teeth, adapters and protections in the group's factories and our selected subcontractors. Over 1 million wear parts are produced and sold each year worldwide.

R&D

With its own Design and Methods Office, equipped with the latest 3D design and printing technologies, Feurst is able to adapt to all market demands, including the most demanding ones.

PATENTED TECHNOLOGY

FEURST holds patents on the TURNKEY® Grizzly and TURNKEY® Rhino range, which cover the locking devices and adapters.

TECHNICAL SUPPORT

Thanks to a very knowledgeable technical ans sales team, FEURST is able to offer tailor-made solutions adapted to all applications.

CUSTOMER SUPPORT

Thanks to an optimised Supply chain, sales administration, its new online platform, allow FEURST to deliver a high level of performance to any customers.

CSR

95% of FEURST products are made from recycled materials (scrap). And 90% of its own waste is recycled.
The Safe Group invests and builds a long-term action plan to reduce its carbon footprint and therefore its energy consumption.

TECHNOLOGY MADE IN **FRANCE**

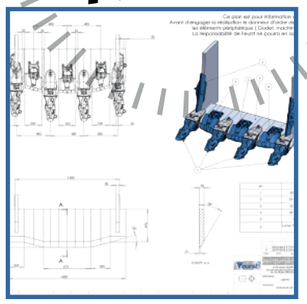

TURNKEY® Rhino is a wide range of ground engaging tools using hammerless locking devices with permanent compression for teeth and shrouds.

The TURNKEY® Rhino process is :

- A secured pin locking at 180°
- A dustproof plug
- Permanent compression of the tooth on the adaptor and compensation for wear.
- A reusable locking devices.

The horizontal, rotative, and self locking devices, offers to the user a great ease and safe handling during assembly and disassembly.

8 %
Fuel savings

- 30 %
assembly time

+ 30 %
lifetime

350 T
Maximum machine weight

300+
References

The Technology TURNKEY® Rhino

The teeth & adapters from the TURNKEY® Rhino range, patented FEURST products, are designed to fulfil the requirements of mining and quarrying machinery.

Our buckets equipments combine performance, productivity, and durability in the toughest abrasive shock applications.

Reversible Wear Cap

A sliding mechanical wear cap is mounted on top of each adaptor to avoid premature wear and damage.

The wear caps are reversible, held in place by the teeth, and last up to 2 tooth changes, depending on the abrasiveness of the material.

Long Life Time

All teeth profiles are designed to self-sharpen as they wear and do not need to be reversed.

This reduces machine downtime. The adapter's geometry is designed to protect the welds from wear, ensuring a secure fitting at all times.

The teeth are locked onto the adapter, minimizing movement and thus wear on the adapter nose.

Adapter noses do not need to be rebuilt.

Optimum Safety

The TURNKEY® Rhino locking devices is a hammerless system , greatly reducing the risk of metal projection and accidents.

The pins are simply pushed by hand and turned 180° counter-clockwise using a manual assembly tool.

Quicker Teeth Change

Teeth and wear caps are quick and easy to replace on site by a single person.

A lifting ring on the upper part of the tooth and adapters allows for a smooth installation.

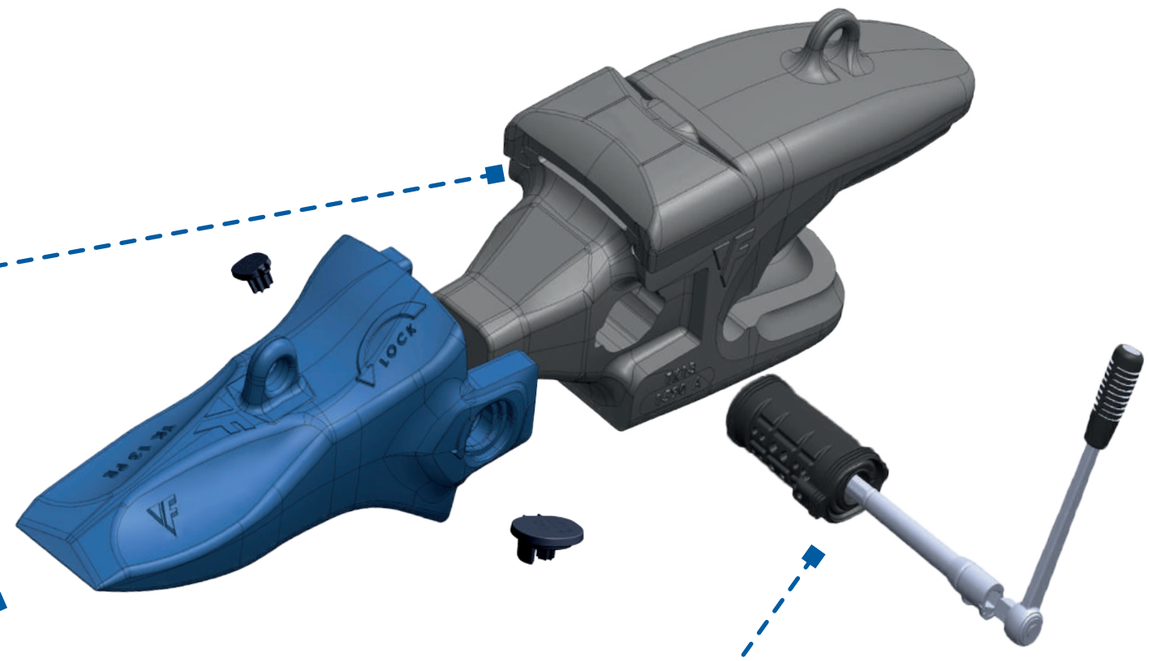

Pin, Plug & Caps

The pin and the plug can not be damaged during installation or disassembly.

The dustproof plug protects and facilitates teeth replacement operations. The caps secure quick access to pin socket hole.

The Solution for Mining and Quarries

More wear Material

The tooth's ears combined with the nose's geometry perform a load transfer, reducing mechanical constraints on the adapter.

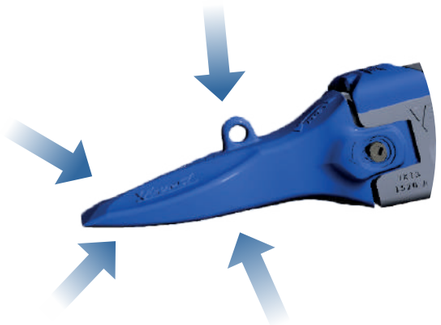

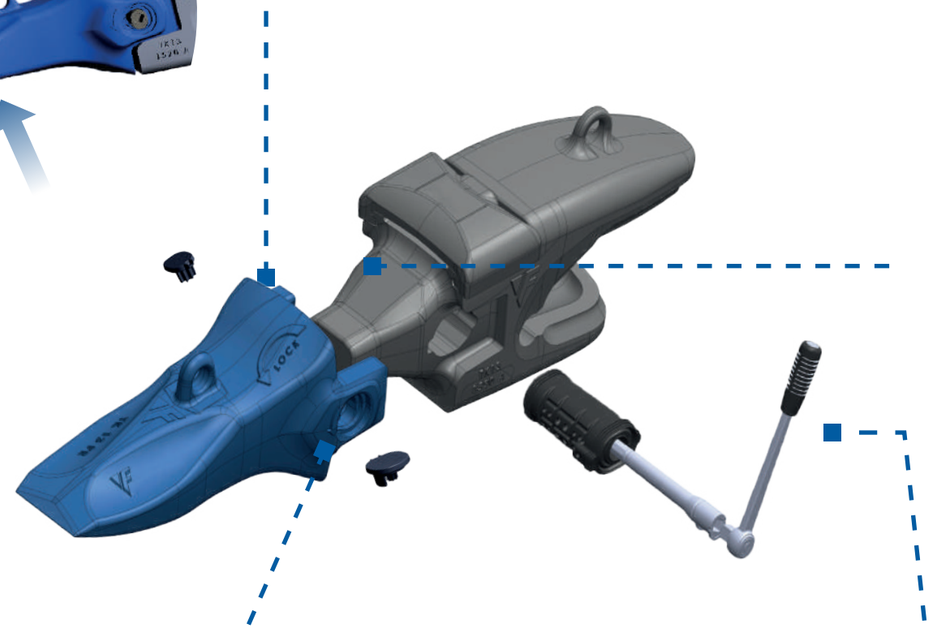

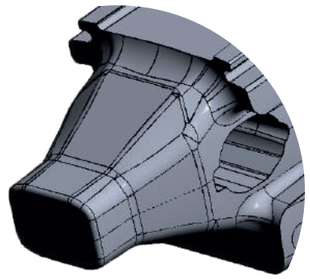

Nose

The complex shapes of the nose, the conical seats, the stabilization flats, combined with the ears, allow optimal tightening with the help of the locking devices.

Features of the new TURNKEY® Rhino locking devices

Reduce risk of bad fitting

Only one way coding conical fitting plug

Only one way coding fitting pin

At the end of a 180° counter-clockwise rotation, a tactile effort and a sound element confirm that the system is locked.

Locking devices

The innovative, rotating, eccentric, and dustproof system that compresses the tooth on the adapter, combined with the performance of the nose, ensures assembly performance, in-service holding, and disassembly under all circumstances.

BENEFITS

Performance and Safety in service

- ***Innovative and secure locking devices***
- ***Perfect fitting***
- ***No loss of teeth***
- ***Better soil penetration***
- ***Driver comfort***
- ***Very easy assembly and disassembly***
- ***Bucket loading optimization***

Reduction of operating costs (T.C.O*)

- ***Reduced fuel consumption*** -8%
- ***Zero machine downtime***
- ***Best quality/price ratio***
  - Extra-long life adapters
  - Increased wear ratio up to 75%
  - Protection of the machine and its components

*Total Cost of Ownership

The complete solution to protect your buckets

We offer complete protection for your buckets base lip and wings working in abrasive conditions.

Only the combination of all our products guarantees the optimization of the bucket.

The wing shrouds also protect the base of the wings and thus limit wear in these highly stressed areas.

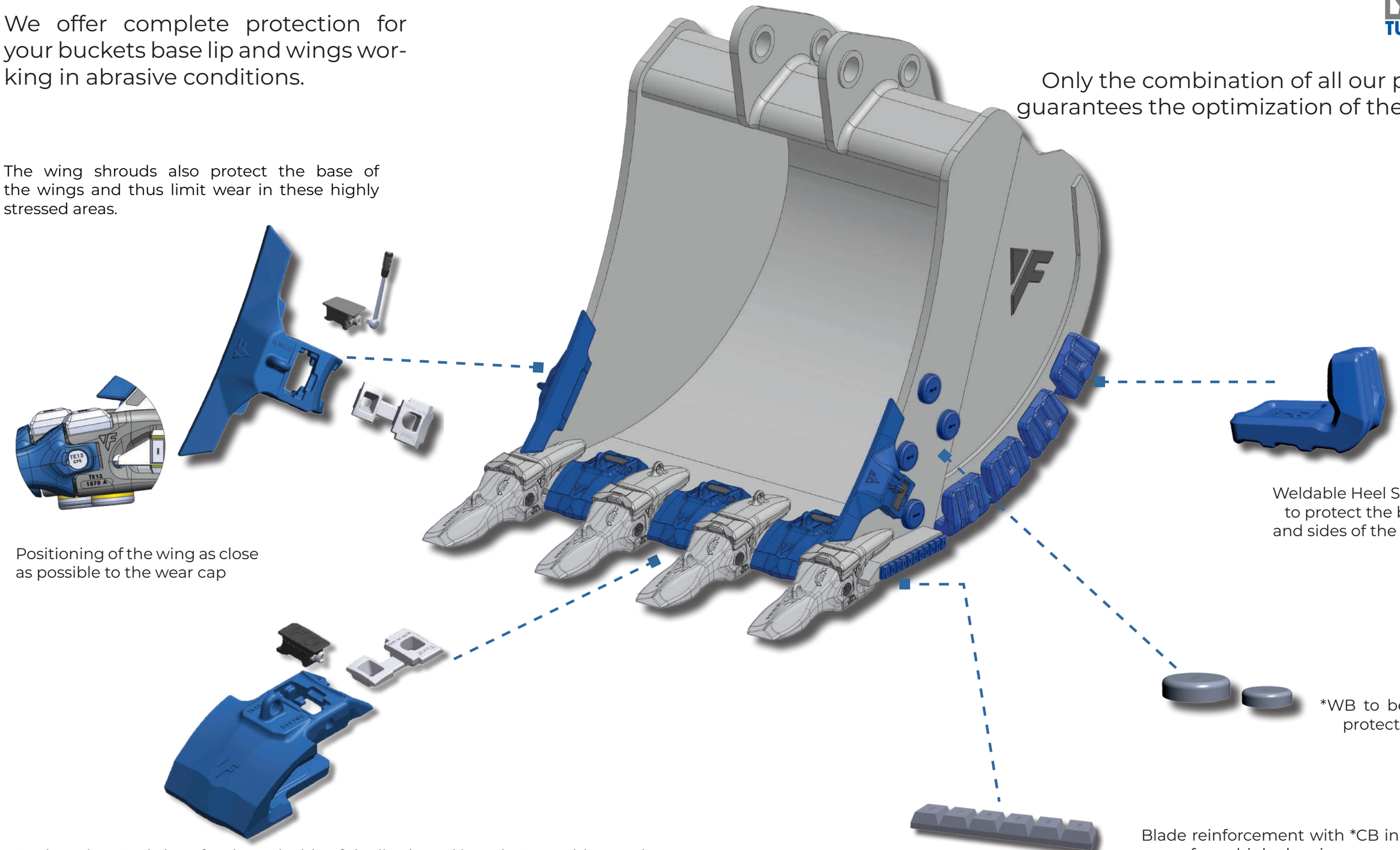

Positioning of the wing as close as possible to the wear cap

Weldable Heel Shrouds to protect the bottom and sides of the bucket

*WB to be welded to protect the sides

Blade reinforcement with *CB in case of very high abrasion

We have inserted chamfers in each side of the lip shroud in order to position as close as possible of the bucket lip and covering adapter's weldings.

*WB = Wear Button
*CB = Chocky Bar

TURNKEY RHINO

Excavators

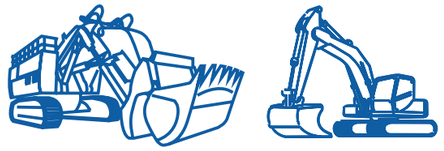

SIZE	MACHINES Weight	ADAPTERS	TEETH	LOCKING DEVICES	BUCKET SHROUDS	
					BLADE SHROUDS	WING SHROUDS
10	 30 - 42 T 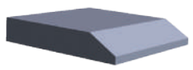 50-60 mm 2 / 2.36 / 2.50 in 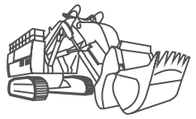 STD. 70T HD 50T	 TKN10 1550 A 10 TKN10 1560 A 10  TKN 10 PA  TKN10 1550 STD TKN10 1560 STD  TKN10 NS	 TKN10 PE  TKN10 PR  TKN10 PR-R  TKN10 DPE  TKN10 PE-C  TKN10 DPE - AUS  **TKN10 RM-R  **TKN10 RM-RR	 TKN10 SB  TKN10 CL  TKN OD 10 11	Compatible Turnkey®  FB 45-300  TKSH EXC 240 60 C TKSH EXC 240 60 L/R 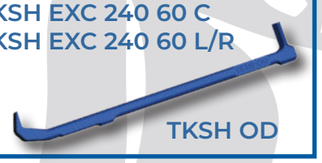 TKSH OD	 TKWH 30 Wing Thickness (30mm)  TKSH 60-90 AD  TKSH 60-90 CL
11	 40 - 52 T 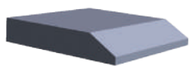 60-70 mm 2.36 / 2.5 / 2.75 in 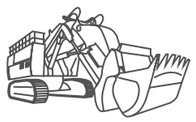 STD. 108T HD 80T	 TKN11 1560 A 10 TKN11 1570 A 10  TKN 11 PA  TKN11 1560 STD TKN11 1570 STD  TKN11 NS	 TKN11 PE  TKN11 PR  TKN11 PR-R  TKN11 DPE  TKN11 PE-C  TKN11 DPE- AUS 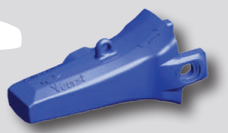 **TKN11 RM-R 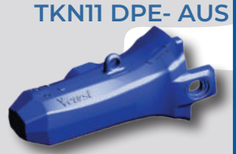 **TKN11 RM-RR	 TKN11 SB  TKN11 CL 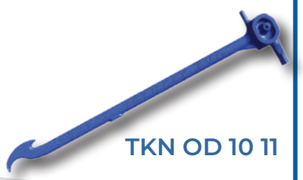 TKN OD 10 11	 TKSH EXC 240 60 C TKSH EXC 240 60 L/R TKSH EXC 245 70 C TKSH EXC 250 70 L/R TKSH EXC 280 70 C TKSH EXC 280 70 L/R TKSH EXC 320 70 C TKSH EXC 320 70 L/R 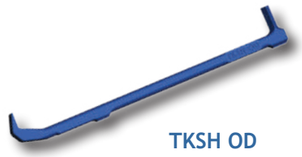 TKSH OD	 TKWH 50 Wing Thickness (50mm)  TKSH 60-90 AD  TKSH 60-90 CL

**In development

Excavators

SIZE	MACHINES Weight	ADAPTERS	TEETH	LOCKING DEVICES	BUCKET SHROUDS	
					BLADE SHROUDS	WING SHROUDS
13	50- 87 T 70-80-90 mm 2.75/3.15/3.5 in STD. 180T HD 135T	TKN13 1570 A 10 TKN13 1580 A 10 TKN13 1590 A 10 TKN 13 PA TKN13 1570 STD TKN13 1590 STD TKN13 NS	TKN13 PE TKN13 PR TKN13 PR-R TKN13 RM-R TKN13 PE-C TKN13 RM-RR TKN13 DPE **TKN13 CP	TKN13 SB TKN13 CL TKN OD 13 19	TKSH EXC 245 70 C TKSH EXC 250 70 L/R TKSH EXC 280 70 C TKSH EXC 280 70 L/R TKSH EXC 320 70 C TKSH EXC 320 70 L/R TKSH EXC 245 90 C TKSH EXC 245 90 L/R TKSH EXC 280 90 C TKSH EXC 280 90 L/R TKSH EXC 320 90 C TKSH EXC 320 90 L/R TKSH EXC 360 90 C TKSH EXC 360 90 L/R	TKWH 50 Wing Thickness (50mm) TKSH OD TKSH 60-90 AD TKSH 60-90 CL
15	85 - 150 T 90-100 mm 3.5/4 in STD. 250T HD 190T	TKN15 1590 A 10 TKN15 15100 A 10 TKN 15 PA TKN15 NS	TKN15 PE TKN15 PR TKN15 PE-C TKN15 PR-R TKN15 RM-R TKN15 RM-RR TKN15 CP	TKN15 SB TKN15 CL TKN OD 13 19	TKSH EXC 245 90 C TKSH EXC 245 90 L/R TKSH EXC 280 90 C TKSH EXC 280 90 L/R TKSH EXC 320 90 C TKSH EXC 320 90 L/R TKSH EXC 360 90 C TKSH EXC 360 90 L/R TKSH EXC 345 100 C TKSH EXC 345 100 L/R TKSH OD	TKWH 50 Wing Thickness (50mm) TKSH 60-90 AD TKSH 60-90 CL TKSH 100-140 AD TKSH 100-140 CL

**In development

Excavators

SIZE	MACHINES Weight	ADAPTERS	TEETH	LOCKING DEVICES	BUCKET SHROUDS	
					BLADE SHROUDS	WING SHROUDS
17	140 - 200 T 100-120 mm 4 / 4.75 in STD. 315T HD 250T	TKN17 15100 A 10 TKN17 15120 A 10 TKN 17 PA TKN17 NS	TKN17 PE-C TKN17 PR TKN17 PE TKN17 RM-R TKN17 RM-RR	TKN17 SB TKN17 CL TKN OD 13 19	TKSH EXC 345 100 C TKSH EXC 345 100 L/R TKSH EXC 380 120 C TKSH EXC 380 120 L/R TKSH OD	TKWH 70 Wing Thickness (70mm) TKSH 100-140 AD TKSH 100-140 CL
19	200 - 350 T 120-140 mm 4.75 / 5.5 in STD. 460T HD 340T	TKN19 15120 A 10 TKN19 15140 A 10 TKN 19 PA TKN19 NS	TKN19 PE-C TKN19 PR TKN19 PR-R TKN19 RM-R TKN19 RM-RR	TKN19 SB TKN19 CL TKN OD 13 19	TKSH EXC 380 120 C TKSH EXC 380 120 L/R TKSH EXC 420 140 C TKSH EXC 420 140 L/R TKSH OD	TKWH 90 Wing Thickness (90mm) TKSH 100-140 AD TKSH 100-140 CL

Wheel Loaders

SIZE	MACHINES Weight	ADAPTERS	TEETH	LOCKING DEVICES	BUCKET SHROUDS	
					BLADE SHROUDS	WING SHROUDS
10	STD. 85T HD 60T 50-60 mm 2 / 2.36 / 2.50 in	TKN10 1850 A 16 TKN10 1860 A 16 TKN 10 PA *TKN10 1550 STD *TKN10 1560 STD TKN10 NS	TKN10 SA TKN10 AP TKN10 RA-X *Usable with the RA-X tooth only.	TKN10 SB TKN10 CL TKN OD 10 11	Compatible with Turnkey® FB45-300 TKSH OD	TKWH 30 Wing Thickness (30mm) TKSH 60-90 AD TKSH 60-90 CL
11	STD. 133T HD 93T 60-70 mm 2.36 / 2.5 / 2.75 in	TKN11 1860 A 16 TKN11 1870 A 16 TKN 11 PA *TKN11 1560 STD *TKN11 1570 STD TKN11 NS	TKN11 SA TKN11 AP TKN11 RA-X *Usable with the RA-X tooth only.	TKN11 SB TKN11 CL TKN OD 10 11	FB60-70 TKN FB60 200 TKN FB60 200 L / R - TKN FB60 250 TKN FB60 300 TKN FB60 350 TKN FB70 250 TKN FB60-70 L / R - TKN TKSH LOAD 370 70 C TKSH LOAD 370 70 L / R TKSH OD	TKWH 50 Wing Thickness (50mm) RPF 300 (A souder) Wing Thickness (30mm) TKSH 60-90 AD TKSH 60-90 CL

Wheel Loaders

SIZE	MACHINES Weight	ADAPTERS	TEETH	LOCKING DEVICES	BUCKET SHROUDS	
					BLADE SHROUDS	WING SHROUDS
13	STD. 170T HD 133T 70-80-90 mm 2.75/3.15/3.54in	TKN13 1870 A 16 TKN13 1880 A 16 TKN13 1880 A 16R TKN13 1880 A 16L TKN13 1890 A 16 TKN 13 PA *TKN13 1570 STD *TKN13 1590 STD TKN13 NS	TKN13 SA TKN13 AP TKN13 RA-X *Usable with the RA-X tooth only.	TKN13 SB TKN13 CL TKN OD 13 19	TKSH LOAD 370 70 C TKSH LOAD 370 70 L/R TKSH LOAD 370 76 C TKSH LOAD 370 76 L/R TKSH LOAD 370 80 C TKSH LOAD 370 80 L/R TKSH LOAD 370 90 C TKSH LOAD 370 90 L/R TKSH OD	TKWH 50 Wing Thickness (50mm) TKSH 60-90 AD TKSH 60-90 CL
15	STD. 280T HD 220T 90-100 mm 3.5 / 4 in	TKN15 1890 A 16 TKN15 18100 A 16 TKN 15 PA TKN15 NS	TKN15 SA TKN15 RPL	TKN15 SB TKN15 CL TKN OD 13 19	TKSH LOAD 370 90 C TKSH LOAD 370 90 L/R TKSH LOAD 370 100 C TKSH LOAD 370 100 L/R TKSH OD	TKWH 50 Wing Thickness (50mm) TKSH 60-90 AD TKSH 60-90 CL
17	STD. 300T HD 270T 100-120 mm 4 / 4.75 in	TKN17 15100 A 10 TKN17 15120 A 10 TKN 17 PA TKN17 NS	**TKN17 RPL	TKN17 SB TKN17 CL TKN OD 13 19	TKSH 100-140 AD TKSH 100-140 CL TKSH OD	TKWH 70 Wing Thickness (70mm)

**In development

Determination of the number of TURNKEY® adapters for a given width of bucket data:

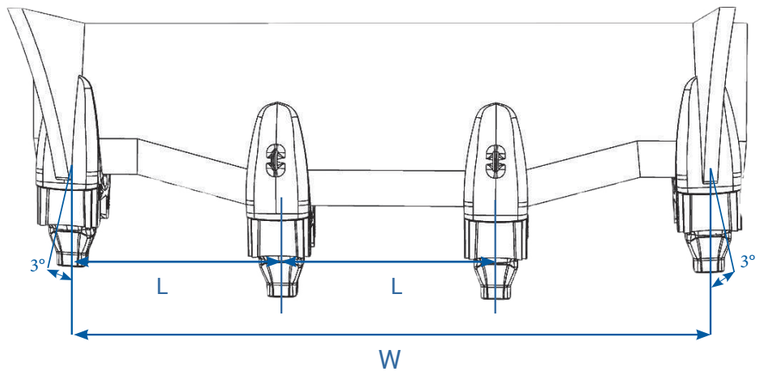

Determination of the number of adapters for a given width:

(For an easier calculation, It is assumed that the corner adapter centerline is aligned with the inside of side plate)

W= Inside lips width (mm)
L mini & L maxi = adapters spacing (See dimensions below)

Minimum number of adapters : $\frac{W}{L\ maxi} + 1 =$

Maximum number of adapters: $\frac{W}{L\ mini} + 1 =$

The choice of the number of adapters is made according to the criteria of applications encountered, knowing that we will put for example :
- In an abrasive environment, a maximum of adapters are recommended
- For better penetration in less abrasive environments, install the minimum number of adapters bucket

Excavator				Wheel Loader	
L (mm)		Size	Adapter Width (mm)	L (mm)	
Mini	Maxi			Mini	Maxi
350	490	TKN 10	150	465	620
380	530	TKN 11	170	500	670
440	550	TKN 13	185	505	680
475	665	TKN 15	215	620	825
540	750	TKN 17	245	690	920
630	880	TKN 19	270	-	-

Tooth / Soil

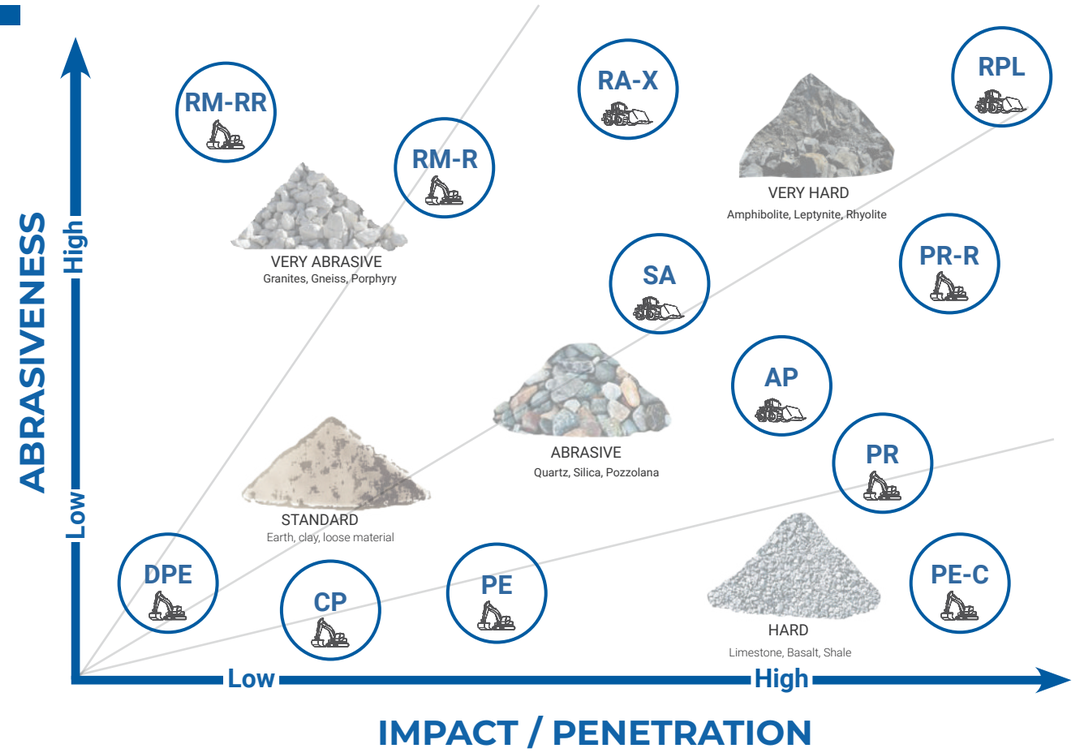

DPE

Twin Pick : *Double vector tooth used on bucket corners to protect the sides from wear.*

PE

Pick : *Long and sharp tooth ensuring an excellent penetration.*

PE-C

Pick Short : *Short tooth,accurate shape to be used as rock cutting tooth.*

RM-R

Resistance Mining : *Mining tooth provides a good balance of abrasion resistance and penetration for tough applications*

PR

Rock Chisel : *Perfect tooth shape for a strong penetration. Excellent compromise wear material/penetration.*

PR-R

Rock Chisel + : *Enough material for a correct abrasion resistance perfect shape enabling better penetration.*

RM-RR

Resistance Mining + : *Reinforced mining excavator tooth offering a good ratio between abrasion resistance and penetration in severe applications.*

SA

Super Abrasion : *Excellent abrasion resistance with penetration-maintaining heel profile.*

RPL

Reinforced Abrasion : *Loader tooth for highly abrasive use, large heel.*

RA-X

Reinforced Abrasion + : *Loader tooth for very hard and abrasive use, important heel.*

AP

Penetrating Abrasion : *Loader tooth offering good wear resistance combined with good penetration.*

CP

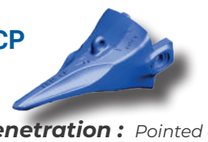

Coal Penetration : *Pointed and penetrating tooth, used to scalp layers of materials in less abrasive environments (such as coal).*

TURNKEY RHINO

Equipment recommendations between machine weight and its breakout force (B.O.F= Break Out Force) expressed in Tons (T)

Taille		TKN 10		TKN 11		TKN 13		TKN 15		TKN 17		TKN 19	
Machine		Standard	HD	Standard	HD	Standard	HD	Standard	HD	Standard	HD	Standard	HD
Excavator	Max. T Weight	70	50	110	88	180	130	270	188	325	210	450	350
	Max. B.O.F.	35	29	46	38	60	46-48	79	63	95	73	120	98
Front Shovel	Max. T Weight	70	50	108	80	180	135	250	190	315	250	460	340
	Max. B.O.F.	42	35	56.5	46	70	54	88	70	105	82	140	110
Wheel Loader	Max. T Weight	85	60	133	93	170	133	280	220	300T	270	-	-
	Max. B.O.F.	59	49	77	63	98	78	133	105	160	130	-	-

1 Tonne = 9.8067 Kn

Recommendation valid for a standard bucket equipped with 5 teeth.

In case of extremely severe use, oversize by one size.

Applications and working conditions must be taken into consideration, consult your FEURST dealer.

Data provided for recommendation purposes only, under no circumstances can FEURST's liability be engaged.

Bucket Selection Based on Application

Standard Bucket : Suitable for digging and loading of soft to medium hard, compact and non-abrasive materials such as earth/rock, sand/gravel, coal, chalk, and non-abrasive ores.

***HD Bucket :** Suitable for digging and loading of mixed earth and rock soils with a high proportion of rock or other abrasive materials.

***XHD Bucket :** Suitable for digging and loading of mixed earth and rock soils with a high proportion of rock and other hard and abrasive materials.

*** HD** = Heavy Duty
*** XHD** = Extrem Heavy Duty

Scan me to access our online configurator

Equipment to install on an HD bucket

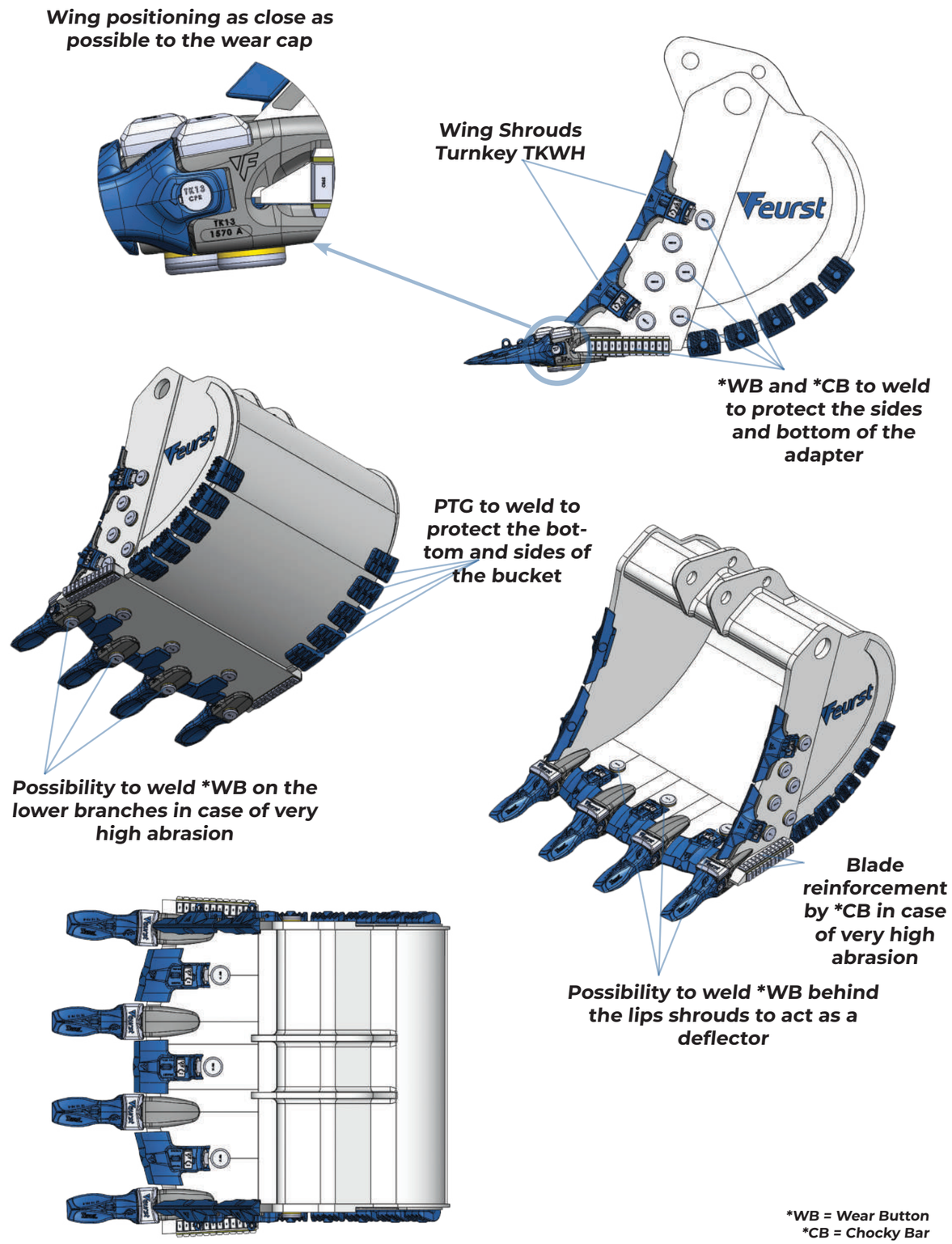

**WB = Wear Button*
**CB = Chocky Bar*

TURNKEY RHINO

Teeth Dimensions

SIZE	TYPE	PART NUMBER	WEIGHT [kg]	DIMENSIONS [mm] A	B	C	D	E
10	PE	TKN10 PE	17	440	168	3	18	113
10	PR	TKN10 PR	19	415	167	7	92	113
10	PR-R	TKN10 PR-R	22	445	168	9	100	113
10	DPE	TKN10 DPE	18	430	168	10	210	113
10	DPE - AUS	TKN10 DPE-AUS	21.5	432	171	45	183	113
10	PE-C	TKN10 PE-C	15	370	168	3	25	113
10	SA	TKN10 SA	23	383	168	20	120	113
10	AP	TKN10 AP	33.4	485	170	25	146	113
10	RA-X	TKN10 RA-X	42.3	500	170	40	146	113
10	RM-R	**TKN10 RM-R	27	415	168	32	100	113
10	RM-RR	**TKN10 RM-RR	29	410	168	38	116	113
11	PE	TKN11 PE	21	480	184	4	20	123
11	PR	TKN11 PR	21.85	442	182	11	53	123
11	PR-R	TKN11 PR-R	27	500	182	6	114	123
11	DPE	TKN11 DPE	22	450	184	11	232	123
11	DPE - AUS	TKN11 DPE-AUS	25.75	462	185	45	197	123
11	PE-C	TKN11 PE-C	18.5	400	184	4	28	123
11	SA	TKN11 SA	27.95	422	182	18	117	123
11	AP	TKN11 AP	43.33	545	185	36	160	123
11	RA-X	TKN11 RA-X	50.6	550	185	55	160	123
11	RM-R	**TKN11 RM-R	31	450	182	37	109	123
11	RM-RR	**TKN11 RM-RR	34	440	182	45	127	123
13	PE	TKN13 PE	26.5	500	196	8	20	139
13	PR	TKN13 PR	30.5	485	196	8	105	139
13	PR-R	TKN13 PR-R	37	524	196	8	113	139
13	RM-R	TKN13 RM-R	38.5	475	196	48	110	139
13	RM-RR	TKN13 RM-RR	45	477	198	59	113	139
13	DPE	TKN13 DPE	32	490	196	12	250	139
13	PE-C	TKN13 PE-C	28	435	196	5	32	139
13	SA	TKN13 SA	41.8	450	196	17	116	139
13	RA-X	TKN13 RA-X	66	540	196	6	123	139
13	AP	TKN13 AP	56.5	529	232	37	178	139
13	CP	**TKN13 CP	-	-	-	-	-	-
15	PE	TKN15 PE	40	555	230	5	17	154
15	PR	TKN15 PR	46.5	535	230	9	143	154
15	PR-R	TKN15 PR-R	55	570	230	11	155	154
15	PE-C	TKN15 PE-C	40	490	230	6	39	154
15	SA	TKN15 SA	57	524	230	31	148	154
15	RM-R	TKN15 RM-R	60	530	230	68	127	154
15	RM-RR	TKN15 RM-RR	76	560	230	82	113	154
15	RPL	TKN15 RPL	95	550	230	28	110	154
15	CP	TKN15 CP	35.4	575	230	8	38	154
17	PE	TKN17 PE	56.5	605	287	27	30	171
17	PE-C	TKN17 PE-C	58	533	283	7	39	171
17	PR	TKN17 PR	74	600	237	17	144	171
17	RM-R	TKN17 RM-R	75	529	285	54	178	171
17	RM-RR	TKN17 RM-RR	97.5	570	285	85	157	171
17	RPL	**TKN17 RPL	138	600	285	50	130	171
19	PE-C	TKN19 PE-C	80.4	600	328	6	52	197
19	PR	TKN19 PR	93	635	328	8	160	197
19	PR-R	TKN19 PR-R	99	645	328	30	150	197
19	RM-RR	TKN19 RM-RR	113	600	328	83	138	197
19	RM-R	TKN19 RM-R	95	560	328	74	161	197

** In development

Adapters Dimensions

SIZE	PART NUMBER	WEIGHT [kg]	Blade Th [mm]	DIMENSIONS [mm] A	B	C	L	∂°	ß°	APPLICATIONS
10	TKN10 1550 A10°	31	50	52	137	240	150	30°	10°	E
10	TKN10 1560 A10°	31	60	62	137	240	150	30°	10°	E
10	TKN10 1550 STD	28,5	50	51	142	240	148	30°	10°	E
10	TKN10 1560 STD	27,5	60	62	142	240	149	30°	10°	E
10	TKN10 1850 A16°	32	50	52	160	245	150	30°	16°	L
10	TKN10 1860 A16°	32	60	64	160	235	150	30°	16°	L
10	TKN10 NS	19.5	-	-	-	-	150	-	-	E / L
10	TKN10 PA	3	-	168	98	43	-	-	-	E / L
11	TKN11 1560 A 10°	46	60	62	178	275	170	30°	10°	E
11	TKN11 1570 A 10°	45.5	70	72	178	275	170	30°	10°	E
11	TKN11 1560 STD	40.5	60	63	190	280	167	30°	10°	E
11	TKN11 1570 STD	40.5	70	72	190	283	167	30°	10°	E
11	TKN11 1860 A 16°	46.9	60	62	202	281	170	30°	16°	L
11	TKN11 1870 A 16°	47.2	70	72	183	281	170	30°	16°	L
11	TKN11 NS	26.3	-	-	-	-	168	-	0°	E / L
11	TKN11 PA	5.26	-	201	11	51	-	-	-	E / L
13	TKN13 1570 A 10°	70.5	70	73	193	330	190	30°	10°	E
13	TKN13 1580 A 10°	70	80	83	193	330	190	30°	10°	E
13	TKN13 1590 A 10°	70.5	90	93	193	330	190	30°	10°	E
13	TKN13 1570 STD	59	70	75	190	330	182	30°	10°	E
13	TKN13 1590 STD	59	90	95	200	330	182	30°	10°	E
13	TKN13 1870 A 16°	77	70	76	245	365	190	30°	16°	L
13	TKN13 1880 A 16°	76.5	80	84	245	365	190	30°	16°	L
13	TKN13 1880 A 16° L	77.3	80	84	245	365	190	30°	16°	L
13	TKN13 1880 A 16° R	77.3	80	84	245	365	190	30°	16°	L
13	TKN13 1890 A 16°	75	90	94	245	365	190	30°	16°	C
13	TKN13 NS	33.2	-	-	-	-	183	-	0°	E / L
13	TKN13 PA	6.6	-	278	124	55	-	-	-	E / L
15	TKN15 1590 A 10°	102.5	90	93	236	410	210	30°	10°	E
15	TKN15 15100 A 10°	104	100	103	236	410	210	30°	10°	E
15	TKN15 1890 A 16°	109	90	95	270	430	210	30°	16°	L
15	TKN15 18100 A 16°	104	100	104	245	410	210	30°	16°	L
15	TKN15 NS	46.8	-	-	-	-	207	-	0°	E / L
15	TKN15 PA	9.3	-	236	151	62	-	-	-	E / L
17	TKN17 15100 A 10°	146	100	104	236	420	240	30°	10°	E
17	TKN17 15120 A 10°	143	120	126	236	420	240	30°	10°	E
17	TKN17 NS	67	100	-	-	-	239	-	0°	E / L
17	TKN17 PA	17	-	276	172	74	-	-	-	E / L
19	TKN19 15120 A 10°	188	120	122	300	510	272	30°	10°	E
19	TKN19 15140 A 10°	187	140	142	300	510	273	30°	10°	E
19	TKN19 NS	91.25	-	-	-	-	270	-	0°	E / L
19	TKN19 PA	27	-	345	215	97	-	-	-	E / L

E = Excavator / L = Loader

Blade Shrouds Dimensions

PART NUMBER	WEIGHT [kg]	Blade Th. [mm]	DIMENSIONS [mm]							APPLICATIONS
			L	A	B	C	D	E	ß°	
TKSH EXC 240 60 C	30.5	60	240	275	156	64	66	30	30°	E
TKSH EXC 240 60 R	30.5	60	240	275	156	64	66	30	30°	E
TKSH EXC 240 60 L	30	60	240	275	153	68	66	30	30°	E
TKSH EXC 245 70 C	35.33	70	245	300	162	74	72	32	30°	E
TKSH EXC 250 70 R	35.83	70	245	300	162	74	72	32	30°	E
TKSH EXC 250 70 L	35.33	70	245	300	162	74	72	32	30°	E
TKSH EXC 280 70 C	38.25	70	280	300	164	74	73	33	30°	E
TKSH EXC 280 70 R	37.87	70	280	300	164	73	73	33	30°	E
TKSH EXC 280 70 L	38	70	280	300	164	73	73	33	30°	E
TKSH EXC 320 70 C	41.83	70	320	300	163	73	73	33	30°	E
TKSH EXC 320 70 R	42.16	70	320	300	163	73	73	33	30°	E
TKSH EXC 320 70 L	42.16	70	320	300	163	73	73	33	30°	E
TKSH LOAD 370 70 C	81	70	370	375	200	158	73	69	30°	L
TKSH LOAD 370 70 R	81.75	70	370	380	205	170	73	71	30°	L
TKSH LOAD 370 70 L	82.25	70	370	380	205	170	73	71	30°	L
TKSH LOAD 370 76 C	80	76	370	380	204	165	79	67	30°	L
TKSH LOAD 370 76 R	80.5	76	370	380	204	167	79	67	30°	L
TKSH LOAD 370 76 L	80.5	76	370	380	204	167	79	67	30°	L
TKSH EXC 245 90 C	49.66	90	245	358	200	106	93	47	30°	E
TKSH EXC 245 90 R	50.66	90	245	365	200	116	93	47	30°	E
TKSH EXC 245 90 L	50.16	90	245	365	200	116	93	45	30°	E
TKSH EXC 280 90 C	54.5	90	280	350	200	105	93	44	30°	E
TKSH EXC 280 90 R	56.25	90	280	360	200	110	93	47	30°	E
TKSH EXC 280 90 L	55	90	280	360	200	110	93	47	30°	E
TKSH EXC 320 90 C	60	90	320	350	202	205	93	47	30°	E
TKSH EXC 320 90 R	61.75	90	320	350	200	110	93	48	30°	E
TKSH EXC 320 90 L	61.25	90	320	360	202	113	93	47	30°	E
TKSH EXC 360 90 C	65.75	90	360	360	200	110	93	48	30°	E
TKSH EXC 360 90 R	67.50	90	360	355	200	114	93	48	30°	E
TKSH EXC 360 90 L	66.25	90	360	355	200	114	93	48	30°	E
TKSH LOAD 370 90 C	106	90	370	420	225	170	93	77	30°	L
TKSH LOAD 370 90 R	109	90	370	420	225	170	93	78	30°	L
TKSH LOAD 370 90 L	109	90	370	420	225	170	93	78	30°	L
TKSH LOAD 370 100 C	102	100	370	420	225	170	103	77	30°	L
TKSH LOAD 370 100 R	105	100	370	420	225	170	103	68	30°	L
TKSH LOAD 370 100 L	105	100	370	420	225	170	103	68	30°	L
TKSH EXC 345 100 C	109	100	345	400	236	137	103	56	30°	E
TKSH EXC 345 100 R	111	100	345	410	236	134	103	56	30°	E
TKSH EXC 345 100 L	111	100	345	403	236	134	103	56	30°	E
TKSH EXC 380 120 C	122	120	380	425	257	150	124	55	30°	E
TKSH EXC 380 120 R	122	120	380	430	257	144	124	55	30°	E
TKSH EXC 380 120 L	122	120	380	430	257	144	124	55	30°	E
TKSH EXC 420 140 C	148	140	420	425	282	150	146	53	30°	E
TKSH EXC 420 140 R	146	140	420	437	286	152	146	55	30°	E
TKSH EXC 420 140 L	146	140	420	437	286	152	146	55	30°	E

E = Excavator / L = Loader

Wing Shrouds Dimensions

PART NUMBER	WEIGHT [kg]	WING THICKNESS [mm]	DIMENSIONS [mm]							APPLICATIONS
			A	B	C	D	E	F	G	
TKWH 30	21	30	36	116	58	570	68	213	10	E / L
TKWH 50	24.3	55	57.6	132	58	590	82	213	17	E / L
TKWH 70	52.5	70	77	178	90	545	140	350	19	E / L
TKWH 90	81.04	90	95	210	80	610	-	315	45	E / L
TKSH 60-90 AD	2.05	-	87	110	207	36.3	-	-	-	E / L
TKSH 60-90 CL	1.4	-	56.3	-	-	-	109	51	-	E / L
TKSH 100-140 AD	5.26	-	116	147	285	44	-	-	-	E / L
TKSH 100-140 CL	3.47	-	75	-	-	-	164	66	-	E / L

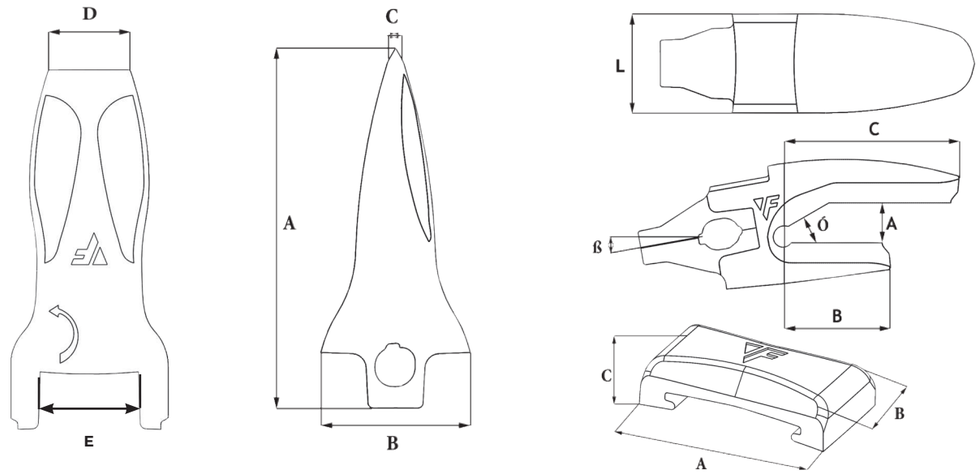

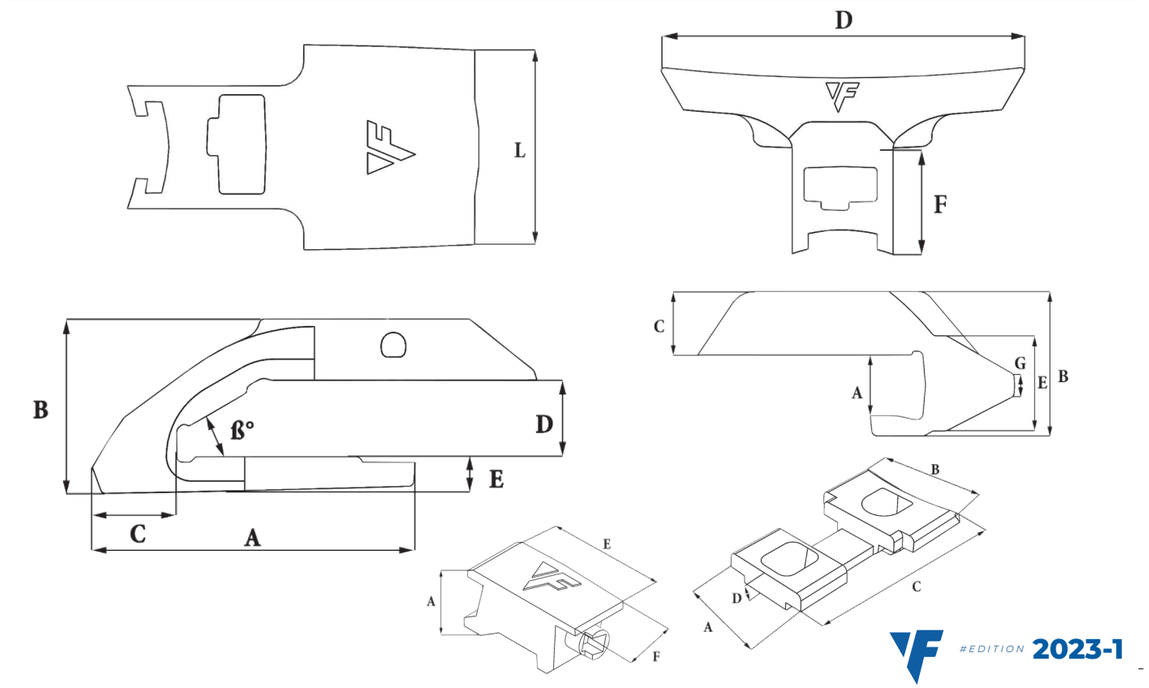

TURNKEY®
RHINO

Follow us on our social media !

Feurst – Bd de la Boissonnette
42110 Feurs – France
Tél +33 (0)4 77 27 40 63
sales@safe-feurst.fr

www.turnkeyteeth.com